Resultative Expressions in Romanian

Imola-Ágnes Farkas
Babeş-Bolyai University, Cluj-Napoca
farkas_imola_agnes@yahoo.com

Abstract

The aim of this paper is two-fold. On the one hand, it proposes to reconsider Romanian resultative constructions by examining lexicalized (idiomatic) expressions of the type *a bate măr* 'beat flat//beat as soft/red as an apple' or *a freca lună/oglindă* 'scrub clean/shiny//scrub as clean/shiny as the moon/mirror' which have not been the object of intense research and which have largely been ignored from several discussions on Romanian resultatives. The focus is on semantic, aspectual, syntactic and l-syntactic pieces of evidence which are all meant to show that these and similar structures are resultative constructions. On the other hand, without diminishing or abolishing the systematic difference that exists between Germanic and Romance languages from the perspective of these predicate constructions, the paper emphasizes the importance of language-specific considerations and it stresses the fact that syntactic and cross-linguistic conclusions should not be drawn on the basis of Romance or other language families more generally, but they need to be related to the analysis of resultatives in a specific language / in specific languages. In this sense, the paper sheds light on some interesting differences among these predicate structures in Romance.

Keywords: Resultative construction, Romanian, Romance, small clause.
Received: 3.IX.2011 – **Accepted:** 22.XII.2011

Table of Contents

1 Introduction
2 Resultative expressions: Semantic evidence
3 Resultative expressions: Aspectual evidence
4 Resultative expressions: Syntactic evidence
5 Resultative expressions: L-syntactic evidence
6 Resultatives in Romanian
7 Final conclusions
References

Ianua. Revista Philologica Romanica
Vol. 11 (2011): 67–88
ISSN 1616-413X
http://www.romaniaminor.net/ianua/

© Romania Minor

BDD-A5290 © 2011 Romania Minor
Provided by Diacronia.ro for IP 216.73.217.31 (2026-11-26 16:59:44 UTC)

1 Introduction

A resultative construction of the surface form DP_1–VP–(DP_2)–XP is a secondary predicate structure where the XP predicate describes the literal or metaphorical state (or location) achieved by the (surface) subject (DP_1) or the postverbal DP (DP_2) it is predicated of as a direct consequence of the action denoted by the verb. In the present paper we especially focus on some less investigated Romanian expressions, like (1a) and (1b) which are semantically and lexically frozen items, but which follow the pattern and the syntax of resultatives:

(1) a. L -au bătut măr.
CL.3.M.SG.ACC have beat.PERF apple
'They have beaten him flat/senseless/to a pulp.' (They have beaten him as red/soft as an apple.)

b. Copilul a răcit cobză.
child has catch a cold.PERF kobsa
'The child has caught a terrible cold.' (The child has caught such a cold that his voice sounded like a kobsa.)

In these examples the sentence-final NP predicate (*măr* 'apple' in (1a) and *cobză* 'kobsa' in (1b)) intensifies the action of the verb and renders an above-the-norm interpretation to the entire construction by denoting a metaphorical end state as a result of the action expressed by the matrix verb.

The metaphorical resultative semantics is achieved by the addition of a bare singular predicative NP in its default form, characterized by the absence of any type of inflection, as shown in the following:

(2) a. a bate măr / *mărul / *un măr / *mere / *merele
to beat apple / the apple / an apple / apples / the apples

b. a răci cobză / *cobza / *o cobză / *cobze / *cobzele
to catch a cold kobsa / the kobsa / a kobsa / kobsas / the kobsas

The puzzling character of these and similar expressions is given by the fact that they have undergone a semantic transfer of a metaphorical type and thus they are built on comparison; i.e. a possible comparison can be drawn between some inherent properties of the NP predicate and the possible resulting state of the Agent/Patient/Theme argument (a possible interpretation of the underlying comparison is given in brackets in (1) and in what follows).

The paper is organized as follows: sections 2 to 5 present the most important pieces of evidence in favour of the resultative status of these and similar predicate expressions. Section 6 analyzes Romanian resultatives in opposition to their counterparts in other Romance languages. Finally, section 7 concludes.

© Romania Minor
http://www.romaniaminor.net/ianua/

BDD-A5290 © 2011 Romania Minor
Provided by Diacronia.ro for IP 216.73.217.31 (2026-11-26 16:59:44 UTC)

2 Resultative expressions: Semantic evidence

Washio (1997, 6–16) calls the English sentences in (3) weak resultatives, because the meaning of the predicate is lexically entailed in the meaning of the verb and it is possible to predict from the semantics of the verb what kind of state the Patient/Theme comes to be in as a result of the action of the verb. As stated by Rappaport Hovav & Levin (2001, 777–778), in these and similar cases a simple event structure is formed from the conflation of two temporally-dependent events.

(3) a. The lake froze solid.
b. The girl scrubbed the floor clean.

Following Rapoport (1999, 671–672), the AP *solid* in (3a) would be the modifier of the final freezing state, rather than the realization of that final state itself. In this case the verb denotes a change in state and the predicate behaves like an adjunct specifying the resulting state or a modifier emphasizing the extent to which the action described by the verb progressed or was carried out. It is also debatable, according to this author whether (3a) is amenable to a causative interpretation, since *to freeze* already means (literally) 'to become solid'; in other words, a paraphrase like «the lake became solid because it froze» may sound as a tautology to many speakers.

As we take the Romanian sentences in (4) to be the direct correspondents of the English resultatives from (3), we could claim that these Romanian examples are also weak resultatives.

(4) a. Lacul a îngheţat bocnă.
the lake has freeze.PERF bone
'The lake has frozen solid.' (The lake has frozen as solid/hard as the bone.)
b. Fata a frecat podeaua lună/oglindă.
the girl has scrub.PERF the floor moon/mirror
'The girl has scrubbed the floor clean/shiny.' (The girl has scrubbed the floor as clean/shiny as the moon/mirror.)

Indeed, in these cases the verb independently denotes change and implies a result state and the predicate lexicalizes this final state inherent in the semantics of the verb, renders the vague endpoint of the event more precise or intensifies the action of the verb by denoting the metaphorical end state of the Patient/Theme argument.

In Ramchand's (2008, 121–138) l-syntactic terms, we would say that the (telic) verb *a îngheţa* 'freeze' identifies *res* even in the absence of a phonetically realized secondary predicate; cf. (5). Hence, the added result phrase which is the complement of RP as in (6) does not modify the Aktionsart of the VP:[1]

[1]For more details on the l-syntax of resultatives, see section 5 below.

BDD-A5290 © 2011 Romania Minor
Provided by Diacronia.ro for IP 216.73.217.31 (2026-11-26 16:59:44 UTC)

(5)

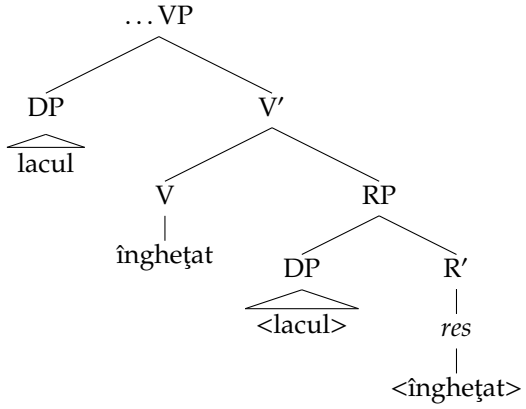

(6)

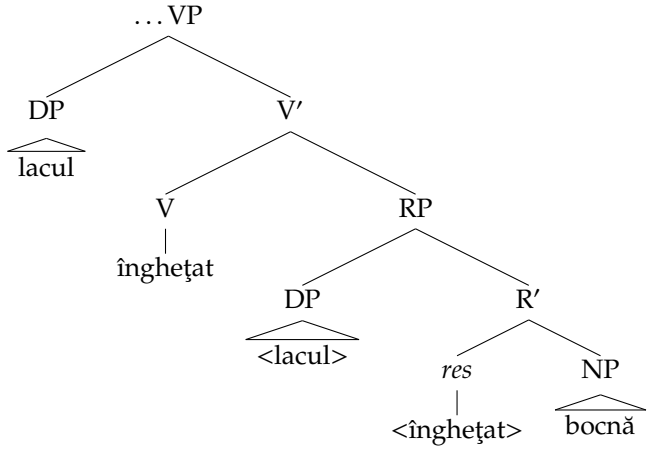

In such an example it is not the presence of the secondary predicate which requires the RP projection, because this projection is licensed by the verb independently.

As redundant information is avoided in resultative constructions, apparently redundant result predicates are specifiers or intensifiers. That is, in (4a) the NP predicate *bocnă* 'bone' cannot rephrase the meaning of the verb *îngheţa* 'freeze' without specifying it or making it more precise.

Contrary to these arguments, we do consider these and similar weak structures to be resultative constructions. Here are some of our arguments:

First of all, the fact that some predicates are specifiers, intensifiers or degree modifiers of the action of the verb merely means that they are different from the result predicates of the canonical type which have been called strong resultatives by Washio (1997, 6–16), where the role of the predicate is to add a piece of information that is not predictable from the basic sense of the verb and where, according to Rappaport Hovav & Levin (2001, 777–778) a causative event structure is formed from the conflation of two temporally-independent events. However, this does not necessarily mean that predicates of weak resultatives do not denote a result of some sort. In this sense, we disagree with Lupşa's

© Romania Minor
http://www.romaniaminor.net/ianua/

BDD-A5290 © 2011 Romania Minor
Provided by Diacronia.ro for IP 216.73.217.31 (2026-11-26 16:59:44 UTC)

(2004, 128) assertion that «the sentence <*lacul au îngheţat bocnă*> appears to be a resultative construction, but it is not». Our critical examination of her approach also extends to her note that *bocnă* 'bone' in a sentence like (4a) and *lună* 'moon' in a sentence like (4b) are APs which do not show any agreement in number and/or gender with the DPs they are predicated of. Our reply to this remark is that these predicates do not show agreement with DPs, because they are simply not APs.[2]

Then, in resultatives there is a close lexical-semantic relation holding between the governing verb and the result predicate, the latter (mostly) specifying a property that is an intrinsic part of the meaning of the verb. However, as to some degree all result predicates lexically depend on the verb they combine with; the causal, temporal and sometimes consecutive relation holding between the verb and the predicate is much stronger than in causatives, depictives or *consider*-type constructions and we believe that it is precisely this feature which differentiates resultatives from all other secondary predicate structures. Therefore, in our opinion, excluding the examples presented in (3) or (4) from the class of resultatives because of the close lexical-semantic relationship between the verb and the predicate would be a mistake.

Moreover, verbs in these weak resultatives (usually change-of-state verbs) convey information about the end result state of the subject DP / postverbal DP, but without the result predicate this end result remains vague in some regard. In this sense, without the result phrase or the proper contextual background information in a sentence like (7) it is not clear what the exact final state of the floor is as a result of scrubbing it:

(7) Fata a frecat podeaua.
the girl has scrub.PERF the floor
'The girl has scrubbed the floor.'

Therefore, the added predicate (e.g. *lună* 'moon' or *oglindă* 'mirror') specifies the end result.

Next, by including oft-cited English constructions, like (3) into the larger class of resultatives and excluding their Romanian correspondents given in (4) based on the metaphorical nature of the predicate which thus achieves its effect via association or resemblance; we would face a serious contradiction both in our definition and in our typology of these predicate structures. We suggest that Romanian examples, like (4) should not be excluded from the class of resultatives solely because of the metaphorical character of the predicate.

Finally, there has been some disagreement in the literature as to whether resultative constructions exist in Romance languages or not. For example, Merlo (1988, 344), Snyder (1996, 728–729) or Beck & Snyder (2001, 114) *inter alia*, remark that Romance languages do not have resultatives. In this sense,

[2] As noted by Scriban (1939, 182) the NP *bocnă* means, among others, *latură* 'side', *coastă* 'rib' and *arşic* 'little bone from the knuckle of the leg, at lambs', from which the meaning of *os* 'bone' must have been developed and from which a possible comparison of the type 'as hard as the bone' could have been developed.

BDD-A5290 © 2011 Romania Minor
Provided by Diacronia.ro for IP 216.73.217.31 (2026-11-26 16:59:44 UTC)

Snyder (1996, 729) notes that «Romance languages have long been noted to contrast with English and other Germanic languages in that they categorically exclude resultative constructions [...] thus, Romance appears to be a strong candidate for a language group in which complex predicates of the English type are systematically excluded».

Clearly, what is at issue here is what is meant by a resultative construction and a result predicate.

On the one hand, taken in a very technical sense, resultatives are formed by gluing an activity-type of verb not including change of state in its meaning with a result secondary predicate, where the action denoted by the activity and the state denoted by the predicate are temporally independent of each other (these are the strong resultatives). In this sense, it is true that certain languages, like Romance languages including Romanian do not have resultatives.

On the other hand, it is also true that any language will have some kind of construction capable of describing the state of an object as a result of some kind of event. This might be, in a less technical sense, the attachment to a change-of-state verb of a predicate which highlights the degree of the outcome of the event or renders the vague endpoint of the event more precise (these are the weak resultatives). The general claim that Romance languages have mostly resultatives of this latter type holds for Romanian, as well.

Now, postulating that the lack of strong resultatives in a given language correlates with the lack of resultative constructions more generally in that certain language would be erroneous in our view. To put it in another way, stating that weak resultatives are not resultatives would mean that there are no resultatives in Romanian; which is different from saying that these constructions are limited in number and systematically differ from the ones in English. There are important distinctions between English (Germanic) and Romanian (Romance) resultatives both in matter of frequency and in matter of typology, but this should not lead to the conclusion that there are no resultatives more generally in Romanian (Romance).

We claim that there are resultative constructions in Romanian. Therefore, one of the basic questions to answer is not whether there are resultative constructions in Romanian (Romance) or not, but what kind of resultatives we find in this language (these languages).

Once again, we underline the idea that resultatives are far less represented in Romanian (Romance languages) than in English (Germanic languages), but this does not mean that they do not exist at all in these former languages.

3 Resultative expressions: Aspectual evidence

The metaphorical constructions from (1) and (4) should be taken into consideration also from an aspectual perspective. From this point of view, if there is any aspect of resultatives that is completely uncontroversial, it is that these

© Romania Minor
http://www.romaniaminor.net/ianua/

BDD-A5290 © 2011 Romania Minor
Provided by Diacronia.ro for IP 216.73.217.31 (2026-11-26 16:59:44 UTC)

predicate structures are always telic; that is, they always describe events with a definite endpoint.[3]

As far as the interaction of the verb and the secondary predicate of the resultative construction is concerned, Tenny (1994, 95–108) notices that when the result predicate is added, the verb phrases are exclusively delimited, with the end of the event defined by the arrival of the direct argument in its new state. In this view, while both in English (8a) and in Romanian (9a) the VP is ambiguous between a telic and an atelic interpretation —proof of this is the compatibility of the VP both with the *in*- and with the *for*-time adverbial— as it does not necessarily entail that a final state has been reached; the same VP is 'converted' to have an unambiguous telic interpretation by the addition of the AP predicate *clean* in (8b) and the NP predicate *lună* 'moon' in (9b); proof of this is the compatibility of the constructions only with the *in*-time adverbial, which necessarily encodes a final result state.[4]

(8) a. The girl wiped the floor in/for ten minutes.
b. The girl wiped the floor clean in/*for ten minutes.

(9) a. Fata a frecat podeaua în/timp de zece minute.
the girl has scrub.PERF the floor in/time of ten minutes
'The girl has scrubbed the floor in/for ten minutes.'
b. Fata a frecat podeaua lună în/*timp de zece minute.
the girl has scrub.PERF the floor moon in/time of ten minutes
'The girl has scrubbed the floor clean in/*for ten minutes.'

Thus, the NP predicate *lună* 'moon' in (9b) behaves like the AP predicate *clean* in (8b): they are both delimiters of the event expressed by the verb.

4 Resultative expressions: Syntactic evidence

From a syntactic point of view the result predicates of weak resultatives behave the same way as the predicates of strong resultatives: predicates of small clauses (SC). Hence, from a syntactic point of view there is no principled way to make a distinction between these two types of resultatives.

There are some compelling pieces of evidence that support the claim that Romanian constructions, like (1) and (4) are best analyzed —just like all the other non-metaphorical resultatives— as small clauses made up of a subject and

[3] Aspectuality is not a property of the verb, but rather of the syntactic structure (e.g. VP) in which the verb is embedded. When talking about the telicity of resultative constructions, we leave aside cases where certain properties of the governing verb (e.g. the progressive form) or of the internal argument (mass nouns, indefinite bare plurals) influence the aspectual nature of the construction.

[4] Telic/bounded constructions which focus on the endpoint of the activity of the verb are compatible with *in*-time adverbials and atelic/unbounded constructions which focus on the duration of the activity of the verb are compatible with *for*-time adverbials. However, in running the *for an hour / in an hour* test we must abstract away from the repetitive reading of the verb and the measuring of the duration of the result state. The ungrammaticality of the *for*-phrase is under the reading where it measures the temporal duration of the process portion of the event.

BDD-A5290 © 2011 Romania Minor
Provided by Diacronia.ro for IP 216.73.217.31 (2026-11-26 16:59:44 UTC)

a non-verbal predicate. In what follows we illustrate some syntactic arguments in favour of the small clause constituency, hoping that they are convincing enough to support our claim.

4.1 The insertion of adverbials

The first syntactic test that we run in favour of the small clause constituency of these and similar constructions is the insertion of adverbials. In support of sentences like (10), Stowell (1983, 300) offers the following argument: PP and adverbial constituents of VP, including emphatic reflexives may intervene between the postverbal direct object and the control complement:

(10) a. Ann told [David *early this morning* to call his mother].
b. I persuaded [Bill *myself* to leave].

In contrast, because of the Phrasal Integrity Condition, Stowell (1983, 300) claims that no constituent of VP may be embedded within the substructure of another complement. In this sense, no adverb or modifier should freely intervene between the subject and the predicate of the small clause, as shown in (11) below:

(11) a. * We feared [$_{SC}$ John *with great concern* killed by the enemy].
b. * I want [$_{SC}$ him *very much* off my ship].
(Stowell 1983, 300)

Likewise, in the following non-metaphorical (12a) and metaphorical (12b) resultatives where the matrix verb is followed by a postverbal DP, adverbials requiring matrix construal and not construal with the non-verbal predicate interrupt the small clause constituent and render the construction ungrammatical:[5]

(12) a. */*? Ea a fiert [$_{SC}$ ouăle *în bucătărie* tari].[6]
she has boil.PERF the egg.N.PL in kitchen hard.PL
'She has boiled the eggs hard in the kitchen.'
b. */*? L$_i$ -au bătut [$_{SC}$ pe Ion$_i$ *pe stradă* măr].[7]
CL.3.M.SG.ACC have beat.PERF PE Ion.ACC on street apple
'They have beaten John flat/to a pulp on the street.'

The example in (12a) is ungrammatical also because of a more general requirement that in Romanian APs should be adjacent to the DPs they modify.

As opposed to this, adverbials modifying the result phrase, like degree modifiers do not interrupt the small clause constituent and do not render the construction ungrammatical. Thus, native speakers who judge (12a) to be infelicitous, judge (13) to be felicitous:

[5]However, these examples are more acceptable if the italicized adverbial is placed between commas and set off from the rest of the (small) clause by comma intonation.
[6]But cf. *Ea a fiert* [$_{SC}$ *ouăle tari*] *în bucătărie*.
[7]But cf. *L$_i$-au bătut* [$_{SC}$ *pe Ion$_i$ măr*] *pe stradă*.

© Romania Minor
http://www.romaniaminor.net/ianua/

BDD-A5290 © 2011 Romania Minor
Provided by Diacronia.ro for IP 216.73.217.31 (2026-11-26 16:59:44 UTC)

(13) Ea a fiert [$_{SC}$ ouăle [foarte tari]].
she has boil.PERF the eggs.N.PL very hard.M/F.PL
'She has boiled the eggs very hard.'

This example is well-formed precisely because *foarte* 'very' is a degree modifier of the result phrase and not a sentential/matrix modifier.

In the non-metaphorical passive (14a) and the metaphorical unaccusative (14b) where the matrix verb is not followed by an overt postverbal DP direct object (subject of the small clause), the insertion of sentential adverbials seems to give rise to more acceptable sentences.

(14) a. OK/? Gardul$_j$ a fost vopsit *în ultima vreme* în verde.
the fence is.PERF painted in last time in green
'The fence has been painted green lately.'

b. OK/? Lacul$_i$ a îngheţat *ieri* bocnă.
the lake has freeze.PERF yesterday bone
'The lake froze solid yesterday.'

The acceptability of these sentences can be derived from the fact that the italicized adverbials do not interrupt a small clause constituent.

This is the reason why those native speakers who have different judgements on (12b) having an overt postverbal DP direct object coindexed with the preverbal clitic and (15) without the same postverbal DP direct object tend to judge the former to be less acceptable than the latter:

(15) OK/? L -au bătut *pe stradă* măr.
CL.3.M.SG.ACC have beat.PERF on street apple
'They have beaten him flat/to a pulp on the street.'

Again, (15) seems to be more acceptable than (12b) because the adverb is not inserted between the subject and the predicate of a small clause.

4.2 Nominalization

Independent support for the claim that the postverbal DP and the result predicate form a constituent can be derived from nominalization. Kayne (1985, 102) argues that classic small clause cases do not nominalize at all, as shown in:

(16) a. * John's consideration [of Bill honest] . . .
(Kayne 1985, 102)

b. * the psychiatrist's judgment [of the student non-adjusted] . . .

The explanation for this is that although verbs may govern across a small clause barrier in order to Case-mark the subject DP of the small clause, such a crossing is not permitted for other categories, e.g. nouns. Also, the '*of* + DP' is in subject position with respect to the predicate of the small clause, hence it must be assigned a θ-role. But being a subjectless PP itself, it is not allowed to receive

BDD-A5290 © 2011 Romania Minor
Provided by Diacronia.ro for IP 216.73.217.31 (2026-11-26 16:59:44 UTC)

a θ-role. Thus, Case Filter and the inability of the nominalized verb to govern across a small clause barrier, together with Theta Criterion are responsible for the ungrammaticality of the examples above.

Likewise, the Romanian examples in (17) illustrate that the nominalization of the verb governing the result small clause gives rise to ungrammaticality:[8]

(17) a. * îngheţatul [lacurilor bocnă] ...
the freezing lakes.GEN bone
'the freezing of lakes solid'

b. * frecatul [meselor lună] ...
the wiping tables.GEN moon
'the wiping of tables clean'

The overall generalization about these nominalized structures is that those native speakers who feel any difference between (17) and (18) mostly judge the former examples to be less acceptable than the latter ones where the predicate is right-adjacent to the nominalized verb:

(18) a. îngheţatul bocnă al lacurilor ...
the freezing bone of lakes.GEN
'the freezing solid of lakes'

b. frecatul lună al meselor ...
the wiping moon of tables.GEN
'the wiping clean of tables'

Some of these examples may be differently judged by different people, but probably not in violation of the general principle.

4.3 Floating quantifiers

An important reason to believe that the structure of a resultative of the form DP_1 VP [$_{SC}$ DP_2 XP] is oversimplified is because the subject of the small clause (DP_2) can be assumed to move out of the small clause constituent to a higher (functional) position. The possibility of this movement is based on the behaviour of floating quantifiers (FQ) whose distribution and position reveals that of adjacent traces linked to their antecedents. This means that a quantifier like *toate* 'all.F.PL' appears followed by the trace of the moved DP. Thus, the structure of (19a) must be (19b), with the general position of these quantifiers as given in (20):

(19) a. Am ţesut florile [$_{SC}$ toate/*toţi într-o ghirlandă].
have weave.PERF flowers.F.PL all.F.PL/all.M.PL in a garland
'I have woven the flowers all into a garland.'

[8] Nominalization occurs from the past participle and not from the infinitive.

© Romania Minor
http://www.romaniaminor.net/ianua/

BDD-A5290 © 2011 Romania Minor
Provided by Diacronia.ro for IP 216.73.217.31 (2026-11-26 16:59:44 UTC)

b. Am ţesut florile$_i$ [$_{SC}$ toate/*toţi t_i într-o ghirlandă].
have weave.PERF flowers.F.PL all.F.PL/all.M.PL in a garland
'I have woven the flowers all into a garland.'

(20) DP$_i$ ... [FQ t_i XP]

A fundamental property of quantifiers which has continued to be the primary motivation for all approaches maintaining that there is a syntactic relationship between them and the DPs they modify is that in many languages quantifiers display agreement for gender and number with the DP that they are associated with. It is the case, among others, of Romance languages including Romanian. Hence, the quantifier *toate* 'all.F.PL' in (19b) is not only followed by the trace of the moved DP *florile* 'the flower.F.PL', but it also shows agreement with it.

The following unaccusative and passive structures with an overt surface subject, but not an overt postverbal DP the result phrase can be predicated of prove that these structures are movement structures where the quantifier indicates the original position of the surface subject which is in fact the subject of the small clause. In other words, the position of the quantifier confirms the correctness of the small clause analysis, as *toţi* 'all.M.PL' in (21a) and *toate* 'all.F.PL' in (21b) indicate the original position of the surface DPs *alpinişti* 'climbers' and *mesele* 'tables', respectively.

(21) a. Alpinişti$_i$ au îngheţat [$_{SC}$ toţi/*toate t_i sloi].
the climber.M.PL have freeze.PERF all.M.PL/all.F.PL ice floe
'The climbers have frozen all solid.'

b. Mesele$_j$ au fost frecate [$_{SC}$ toate/*toată t_j lună].
the table.F.PL are.PERF scrubbed all.F.PL/all.F.SG moon
'The tables have been scrubbed all clean/shiny.'

That the moved DP is the subject and the sentence-final NP is the predicate of a small clause is shown in the following D-structure examples, the transitive counterparts of (21):

(22) a. ... îngheţat (alpinişti) [$_{SC}$ toţi/*toate alpinişti sloi]
freeze.PERF the climbers all.M.PL/all.F.PL climbers ice floe
'... froze (the climbers) all the climbers solid'

b. ... frecat (mesele) [$_{SC}$ toate/*toată mesele lună]
scrub.PERF the tables all.F.PL/all.F.SG tables moon
'... scrubbed (the tables) all the tables clean'

This approach to quantifiers makes empirical predictions when we look at their position with respect to inserted sentential adverbs. As noted by Adger (2003, 208–209), the adverbial may appear to the left of the FQ and cannot interrupt the (D-structure) subject-predicate relationship, as in:

BDD-A5290 © 2011 Romania Minor
Provided by Diacronia.ro for IP 216.73.217.31 (2026-11-26 16:59:44 UTC)

(23) The dragons$_i$ *simply* [all t_i (**simply*) died out].
(Adger 2003, 209)

We have previously seen that such adverbs requiring matrix construal cannot interrupt the small clause constituent. Thus, we would expect that when such an adverb appears in a resultative with a quantifier, it cannot be felicitously inserted to the right of the quantifier, that is, in a position inside the small clause constituent. This expectation is borne out by the following examples:

(24) a. Am ţesut florile$_i$ *ieri* [$_{SC}$ toate t_i (**ieri*) într-o
have weave.PERF flower.F.PL yesterday all.F.PL yesterday into a
ghirlandă].
garland
'I wove the flowers yesterday all (*yesterday) into a garland.'

b. Alpiniştii$_j$ au îngheţat *la munte* [$_{SC}$ toţi t_j (**la munte*)
climbers have freeze.PERF at mountain all.M.PL at mountain
sloi].
ice floe
'The climbers have frozen at the mountains all (*at the mountains) solid.'

c. Mesele$_k$ au fost frecate *ieri* [$_{SC}$ toate t_k (**ieri*) lună].
tables are.PERF scrubbed yesterday all.F.PL yesterday moon
'The tables were scrubbed yesterday all (*yesterday) clean/shiny.'

Consequently, a matrix adverb cannot interrupt the [quantifier (and the trace of the moved DP) – result predicate] constituent, because it forms a unit of some sort.

What we conclude from here is that the position of quantifiers confirms the correctness of the small clause analysis both of the metaphorical and of the non-metaphorical result sentences.

5 Resultative expressions: L-syntactic evidence

Romanian conforms to the generalization about Romance resultatives, as most of the governing verbs entering the derivation of these structures independently entail the notion of change or encode some directionality towards a change. What is further interesting to note is that the metaphorical expressions under study in this paper fit into the pattern of Romanian/Romance resultatives, as they are mostly built on change-of-state verbs. Moreover, as these verbs are felicitously combined with the *in*-time adverbial, they are inherently telic, or, at worst ambiguous between a telic and an atelic reading. Cf. the following:

(25) a. Bolnavul a adormit *toată ziua / într-o oră.
the sick man has fall asleep.PERF all day / in an hour
'The sick man has fallen asleep *all day / in an hour.'

© Romania Minor
http://www.romaniaminor.net/ianua/

BDD-A5290 © 2011 Romania Minor
Provided by Diacronia.ro for IP 216.73.217.31 (2026-11-26 16:59:44 UTC)

b. M -am supărat *timp de / în cinci minute.
CL.1.SG.REFL.ACC have get angry.PERF time of / in five minutes
'I have got angry *for/in five minutes.'

c. Noi ne -am vindecat *timp de / în două zile.
we CL.1.PL.ACC have heal.PERF time of / in two days
'We have got healed *for/in two days.'

In l-syntactic terms, these verbs independently incorporate Ramchand's (2008) *res* functional head in their structure also in the absence of a result predicate (in other words they are [(init), proc, res]-type of verbs). This is illustrated in the following tree diagram for (25a):

(26)

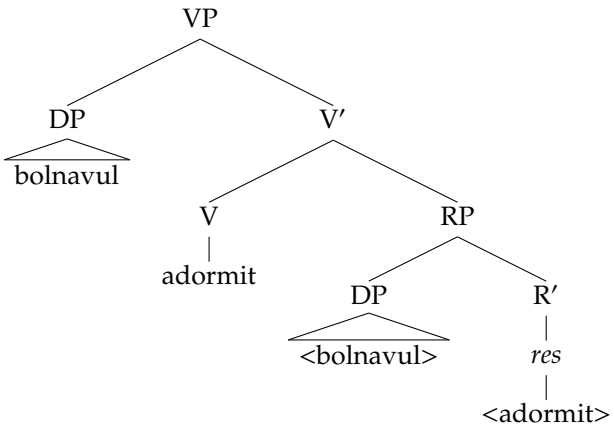

Hence, in such an example the presence of the predicate does not correlate with a syntactic structure in which the RP projection is present, because this projection is licensed by the verb on its own. All that changes in resultatives, like (27) is that the added sentence-final NP predicates highlight the degree of the outcome of the event or intensify the action of the verb by denoting the metaphorical end state of the subject DPs.

(27) a. Bolnavul a adormit buştean.
the sick man has fall asleep.PERF log
'The sick man has fallen into a (very) deep sleep.' (The sick man has fallen asleep and became as insensible as a log.)

b. M -am supărat foc.
CL.1.SG.REFL.ACC have get angry.PERF fire
'I have got very angry.' (I have got so angry that I became as red as fire.)

c. Ne -am trezit vindecaţi taftă.
CL.1.PL.ACC have wake up.PERF healed.M.PL taffeta
'We have woken up completely healed.' (We have woken up with the breathing as easy/smooth as the taffeta.)

(Creangă 1881, 34)

BDD-A5290 © 2011 Romania Minor
Provided by Diacronia.ro for IP 216.73.217.31 (2026-11-26 16:59:44 UTC)

The l-syntactic representation of (27a) sketched below shows that *res* is identified by the matrix verb and the predicate is the complement of the RP functional projection:

(28)

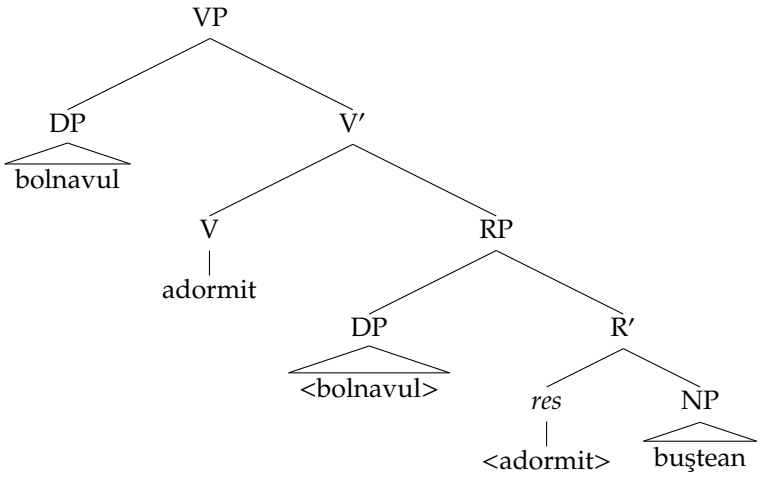

What we remark here is that although the meaning of the predicate is encoded in the meaning of the verb, the sentence in (27a), just like all the other examples in (27) is not perceived as redundant. However, that this is a classic example of what the literature calls a weak resultative is clearly illustrated in the tree diagram above.

6 Resultatives in Romanian

It is a well-known fact that while Germanic languages are very productive with respect to change of location and change of state structures, Romance languages differ significantly in that they restrict such derivational patterns or even rule them out as completely ungrammatical. With the present analysis we wish neither to diminish or abolish the systematic difference that exists between the resultative constructions of Germanic and Romance languages, nor to discredit the generalization that English is much more productive and liberal in the expression of strong and weak resultatives than Romanian is which restricts itself mostly to weak resultatives. However, if our analysis is on the right track, we have reasons to claim that Romanian resultatives should be reconsidered; hence, language-specific considerations should be taken into account and conclusions should not be drawn on the basis of Romance languages more generally, but they need to be related to the analysis of resultatives in a specific language.

At first sight, from the perspective of these predicate structures Romanian harmoniously integrates into the class of Romance languages and looks to be of the Romance type. Although it shares many properties with Romance languages and it does not escape the confines of already-existing parameterizations according to which these languages license mostly or almost exclusively weak

© Romania Minor
http://www.romaniaminor.net/ianua/

BDD-A5290 © 2011 Romania Minor
Provided by Diacronia.ro for IP 216.73.217.31 (2026-11-26 16:59:44 UTC)

resultatives; it also shows some interesting peculiarities that set it apart from other Romance languages and a closer examination of the data reveals a much more complicated picture.

For instance, the canonical English resultative given in (29) does not seem to have a resultative counterpart in French, Spanish and Catalan; cf. the examples in (30):[9]

(29) John wiped the table clean.

(30) a. * Jean a essuyé la table propre.
John has wipe.PERF the table clean
'John has wiped the table clean.'

b. * Juan fregó la mesa limpia.
John wipe.PERF the table clean
'John has wiped the table clean.'

c. * La noia va fregar la taula neta.
the girl has wipe.PERF the table clean
'The girl has wiped the table clean.'

(Mateu 2000, 87)

In contrast, Italian (31a) and Romanian (31b) show some similarities in their resultative correspondent of the English (29), with the predicate expressed by a PP and an NP respectively, both involving a comparison:

(31) a. Gianni ha pulito il tavolo a lucido / a specchio.
John has wipe.PERF the table to shiny / to mirror
'John has wiped the table shiny / as shiny as the mirror.'

b. Fata a frecat masa lună/oglindă.
the girl has scrub.PERF the table moon/mirror
'The girl has scrubbed the table shiny/clean.'

Nevertheless, the sentences from (31) are felicitous under a resultative interpretation precisely because of the metaphorical meaning and use of the predicate which —by the comparison it is built on— establishes a relationship between some of its inherent properties and a possible property that is acquired by the postverbal DP as a result of the action of the verb. But if the NP predicate is replaced with a non-metaphorical AP predicate, only a depictive or an attributive meaning arises, as in other Romance languages; cf. the example in (32):

(32) * Fata a frecat masa strălucitoare/curată.
the girl has scrub.PERF the table shiny.F.SG/clean.F.SG
'The girl has scrubbed the table shiny/clean.'

[9] These Spanish and Catalan examples are quite marginal even under a depictive reading. However, they are fully possible under an attributive reading (Mateu, email correspondence).

BDD-A5290 © 2011 Romania Minor
Provided by Diacronia.ro for IP 216.73.217.31 (2026-11-26 16:59:44 UTC)

The example in (32) also emphasizes the generalization that AP resultatives are severely restricted in Romanian.

Mateu (2000, 91) argues that the reason why Napoli (1992, 72) considers that Romance languages exhibit resultatives is because Italian has transitive sentences with resultatives of the type exemplified for English in *the butcher slices the meat thin*, but the exact translation of the English *the river froze solid* is at best marginal and at worst ungrammatical, as illustrated by ?**Il fiume è ghiacciato solido*. However, the unavailability of a canonical resultative, like *the river froze solid*, as a paradigm case of this construction should not be taken as evidence of unavailability of resultatives more generally in that certain language; as a language can be counted as genuinely permitting resultatives only if additional examples are attested. In other words, although similar AP resultatives are not possible in Romance, it is not the case that the resultative semantics is completely absent from these languages.

Moreover, the statement about the Italian correspondent of the English *the river froze solid* does not stand for Romanian, as shown by the following (metaphorical) example:

(33) Râul a îngheţat bocnă.
the river has freeze.PERF bone
'The river has frozen solid.'

In the same way, Merlo (1988, 338) incorrectly argues that «I will try to find an explanation for the fact that resultatives are not allowed in Romance, on the basis of Italian evidence». As we have just seen, generalizations of this sort do not hold.

Also, if the present analysis is on the right track, we have reasons to challenge the view that —owing to the existence of some shared crucial properties and a shared l-syntactic structure— resultative secondary predicates are compatible neither with denominal, nor with deadjectival verbs. This would mean that, for instance Romanian denominal and deadjectival verbs derived by means of the verbal prefixes *în-* 'in/into' or *îm-* 'in/into' are not possible in a resultative configuration.

Let's take a look at the denominal verb *a (se) îndrăgosti* 'fall in love' and the deadjectival verb *a (se) îmbăta* 'get drunk'. Both of them are formed by means of prefixation and semantically have the meaning 'cause to become in N/A' (transitive) and 'become in N/A' (intransitive), where N/A stand for the noun/adjective the respective denominal and deadjectival verb is derived from.

The derivation of these verbs is given below:

(34) a. Denominal verb: *în-/îm-* + N
e.g. *a (se) îndrăgosti* 'fall in love' = *în-* 'in/into' + *dragoste* 'love' + *i*
b. Deadjectival verb: *în-/îm-* + A
e.g. *a (se) îmbăta* 'get drunk' = *îm-* 'in/into' + *beat* 'drunk' + *a*

As intransitives, these verbs appear in configurations, like:

© Romania Minor
http://www.romaniaminor.net/ianua/

BDD-A5290 © 2011 Romania Minor
Provided by Diacronia.ro for IP 216.73.217.31 (2026-11-26 16:59:44 UTC)

(35) a. Fata s- -a îndrăgostit.
the girl CL.3.SG.REFL.ACC has fall in love.PERF
'The girl has fallen in love.'

b. Ion s- -a îmbătat.
John CL.3.SG.REFL.ACC has get drunk.PERF
'John has got drunk.'

In tackling the issue of such verbs, Ramchand (2008, 91–100) follows the theory of lexical decomposition put forth by Hale & Keyser (1993, 53–70) who define these verbs as derived by movement (incorporation) of lexical material from complement position into the abstract, phonologically empty head of the verbal projection. In her theory deadjectival and denominal verbs are the result of rhematic material moved from the complement position and incorporated into the head.

Restricting ourselves to the verb *a (se) îndrăgosti* 'fall in love', we note, based on (36), that the nominal the verb is derived from functions as the complement of the PP which is identified by *în-*. This is the so-called RHEME of result which further describes the final state/location, as opposed to RHEME of process which further describes the process by expressing manner or path. The process of formation of this denominal verb involves first the incorporation of the N *dragoste* 'love' from complement-to-P position into the phonologically realized P head and then the P + N compound into the upper *res* head of the verb.

(36)

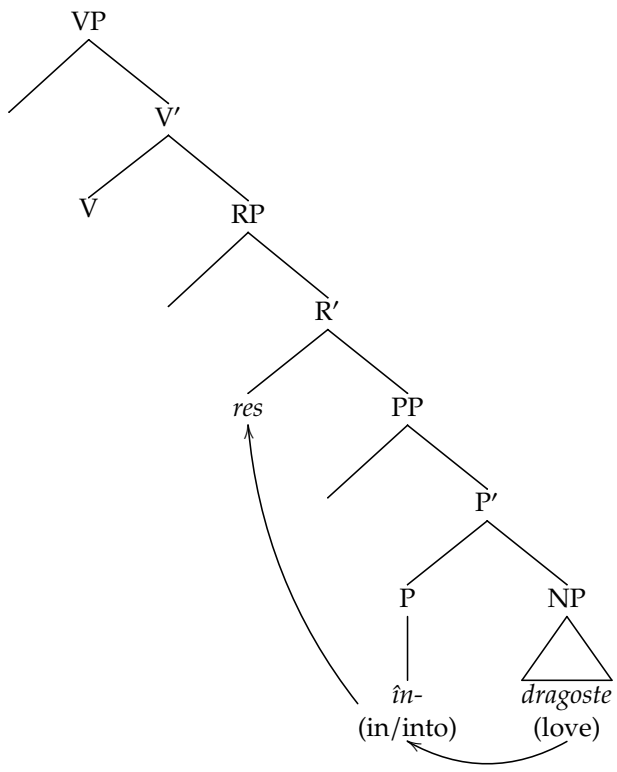

BDD-A5290 © 2011 Romania Minor
Provided by Diacronia.ro for IP 216.73.217.31 (2026-11-26 16:59:44 UTC)

This is a case of movement from complement position into *res* which results in a verb specified as [(init), proc, res] since the rhematic material identifies the result state.

The reason why such a verb would be impossible in a result configuration is because the N from which the verb is formed would be generated in the same syntactic position as the result predicate: complement of RP. This view has been shared also by Gumiel *et al.* (1999, 111–117) who propose the following structures for the Spanish deadjectival verb *engordar* 'fatten' and for the English result construction *John pounded the metal flat*.

(37)

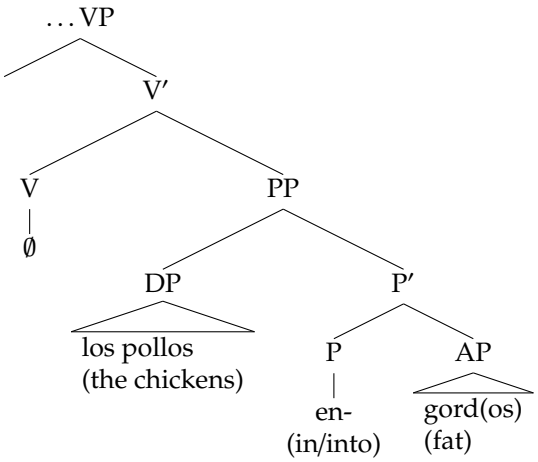

(38)

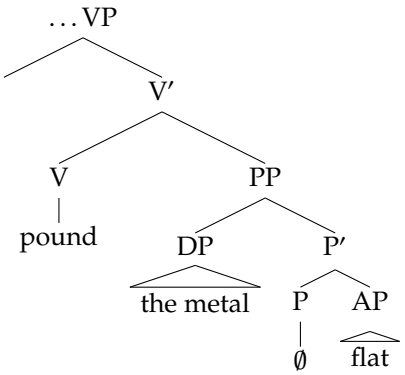

(Gumiel *et al.* 1999, 112)

The Spanish deadjectival verb *engordar* 'fatten' is claimed to be impossible in a result configuration, since the adjective *gord*(*os*) 'fat' in (37) from which the verb is built up generates in the same syntactic position as the result predicate *flat* in (38).

The authors give the following examples to illustrate the existence of a parallelism between denominal/deadjectival verbs and constructions with result predicates.

(39) a. * John bottled the wine sour.

© Romania Minor
http://www.romaniaminor.net/ianua/

BDD-A5290 © 2011 Romania Minor
Provided by Diacronia.ro for IP 216.73.217.31 (2026-11-26 16:59:44 UTC)

b. * John jailed the prisoners dead.

(Gumiel *et al*. 1999, 120)

(40) a. * Mary fattened the chickens dead.

b. * I thickened the sauce solid.

(Gumiel *et al*. 1999, 121)

These sentences are ungrammatical precisely because of the incompatibility of such verbs with result predicates.

However, the co-occurrence of resultatives with denominal/deadjectival verbs is possible as long as the predicate is not interpreted as delimiter of the action of the verb; cf. also Tortora (1998, 341). This means that the added predicate acts either as a further specification of the resulting state entailed in the verb or as an intensifier of the action of the telic verb. This is shown by the following metaphorical examples, the result counterparts of (35):

(41) a. Fata s- -a îndrăgostit lulea.
the girl CL.3.SG.REFL.ACC has fall in love.PERF pipe
'The girl has fallen deeply in love.' (The girl has fallen so deeply in love that smoke came out of her ears like from a pipe.)

b. Ion s- -a îmbătat criţă.
John CL.3.SG.REFL.ACC has get drunk.PERF steel
'John has got very drunk.' (John has got so drunk that he became as tough/harsh as steel.)

As expected, in (41a) the verb identifies *res* and the NP predicate *lulea* 'pipe', as the intensifier of the action of the verb is the complement of the RP projection, as depicted below:

(42)

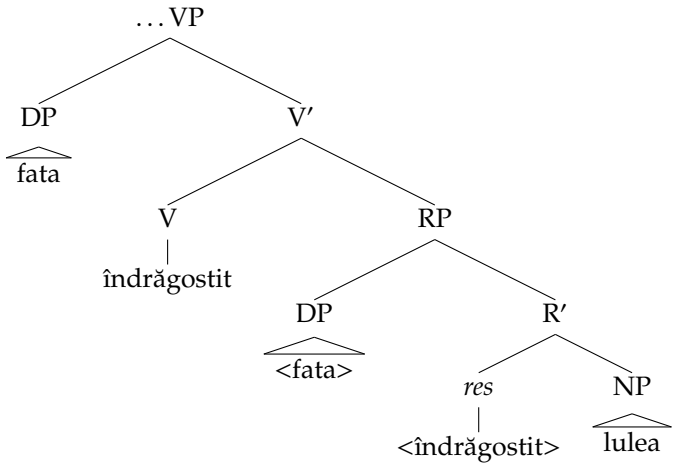

However, as a final remark we would like to highlight the fact that the range of denominal and deadjectival verbs occurring in such a resultative pattern in Romanian is extremely restricted.

BDD-A5290 © 2011 Romania Minor
Provided by Diacronia.ro for IP 216.73.217.31 (2026-11-26 16:59:44 UTC)

6.1 Intermediary conclusion

As an intermediary conclusion, we can say that although Romanian resultatives and especially the metaphorical expressions under study in the present paper fit into the main descriptive generalization of Romance resultatives, as they are mostly built on [(init), proc, res]-type of verbs where the added secondary predicate highlights the degree of the outcome of the event or intensifies the action of the verb by denoting a metaphorical end state; they also shed light on some interesting peculiarities of these predicate structures in this Romance language. Therefore, we can rightly state the following. On the one hand, Romanian resultatives need to be reconsidered. On the other hand, going beyond the generalizations related to language families, language-specific considerations should be taken into account and conclusions should not be drawn on the basis of Germanic or Romance languages more generally, but they need to be related to the analysis of resultatives in a certain specific language. Although it has been beyond the scope of the present paper to discuss resultative constructions more generally in Romance languages, we have cast light on some interesting differences among (at least) some languages belonging to this language family.

7 Final conclusions

In the present paper we have focused on some less studied Romanian metaphorical structures, like *a bate măr* 'beat flat//beat as soft/red as an apple' and *a freca lună/oglindă* 'scrub clean/shiny//scrub as clean/shiny as the moon/mirror'. We have made the following assertions: (i) weak resultatives are resultatives; hence, Romanian does have resultative constructions and (ii) the metaphorical expressions under study in the paper are resultatives. As a consequence of these claims, as well as based on the pieces of evidence shown in sections 2 to 5, we have reached the following conclusions:

i. Although Romanian shares many properties with Romance languages, it also shows some interesting features that set it apart from other Romance languages. Therefore, we have proposed that language-specific considerations should be taken into account and conclusions should be related to the analysis of resultatives in a specific language.
ii. Although very restrictively, resultative constructions in Romanian can be built on denominal and deadjectival verbs.

By bringing forth novel data from Romanian we hope to have contributed to a better understanding of the parameters underlying the patterns observed with these predicate constructions in this Romance language.

© Romania Minor
http://www.romaniaminor.net/ianua/

BDD-A5290 © 2011 Romania Minor
Provided by Diacronia.ro for IP 216.73.217.31 (2026-11-26 16:59:44 UTC)

References

Adger, David (2003): *Core syntax: A minimalist approach*. Oxford: Oxford University Press.

Beck, Sigrid; Snyder, William (2001): «Complex predicates and goal PP's: Evidence for a semantic parameter.» In: Anna H.-J. Do; Laura Domínguez; Aimee Johansen [ed.]: *Proceedings of the 25th Annual Boston University Conference on Language Development*. Sommerville (MA): Cascadilla Press, 114–122.

Creangă, Ion (1881): *Amintiri din copilărie*. Bucureşti: Editura Albatros.

Gumiel Molina, Silvia; Nieto Herranz, Isabel; Pérez Jiménez, Isabel (1999): «Some remarks on de-adjectival verbs and resultative secondary predicates.» *Catalan Working Papers in Linguistics* 7: 107–124. URL: <http://ddd.uab.cat/pub/cjol/1132256Xv7p107.pdf>.

Hale, Kenneth; Keyser, Samuel Jay (1993): «On argument structure and the lexical expression of syntactic relations.» In: Kenneth Hale; Samuel Jay Keyser [ed.]: *The view from building 20: Essays in linguistics in honor of Sylvain Bromberger*. Cambridge (MA): The MIT Press, 53–109.

Kayne, Richard (1985): «Principles of particle constructions.» In: Jacqueline Gueron; Hans Georg Obenauer; Jean-Yves Pollock [ed.]: *Grammatical representation*. Dordrecht: Foris Publications, 101–140.

Lupşa, Cornelia Daniela (2004): «Resultative phrases as modifiers.» Ph.D. dissertation. Tohoku University.

Mateu, Jaume (2000): «Why can't we wipe the slate clean? A lexical-syntactic approach to resultative constructions.» *Catalan Working Papers in Linguistics* 8: 71–95. URL: <http://ddd.uab.cat/pub/cjol/1132256Xv8p71.pdf>.

Merlo, Paola. (1988): «Secondary predicates in Italian and English.» In: Joyce Powers; Kenneth De Jong [ed.]: *Proceedings of the 5th Eastern States Conference on Linguistics*. Columbus (OH): The Ohio State University, 338–348.

Napoli, Donna Jo (1992): «Secondary resultative predicates in Italian.» *Journal of Linguistics* 28(1): 53–90. DOI: 10.1017/S0022226700014997.

Ramchand, Gillian (2008): *Verb meaning and the lexicon: A first-phase syntax*. Cambridge: Cambridge University Press.

Rapoport, Tova R. (1999): «Structure, aspect, and the predicate.» *Language* 75(4): 653–677. URL: <http://www.jstor.org/stable/417729>.

Rappaport Hovav, Malka; Levin, Beth. (2001): «An event structure account of English resultatives.» *Language* 77(4): 766–797. DOI: 10.1353/lan.2001.0221.

Scriban, August (1939): *Dicţionaru limbii romîneşti*. Iaşi: Institutu de Arte Grafice «Presa Bună».

Snyder, William (1996): «The acquisitional role of the syntax-morphology interface: Morphological compounds and syntactic complex predicates.»

BDD-A5290 © 2011 Romania Minor
Provided by Diacronia.ro for IP 216.73.217.31 (2026-11-26 16:59:44 UTC)

In: Andy Stringfellow; Dalia Cahana-Amitay; Elizabeth Hughes; Andrea Zukowski [ed.]: *BUCLD 20: Proceedings of the 20th annual Boston University Conference on Language Development*. Somerville (MA): Cascadilla Press, vol. 2, 728–735.

Stowell, Tim (1983): «Subjects across categories.» *The Linguistic Review* 2(3): 285–312.

Tenny, Carol (1994): *Aspectual roles and the syntax-semantics interface*. Dordrecht: Kluwer Academic Publishers.

Tortora, Cristina (1998): «Verbs of inherently directed motion are compatible with resultative phrases.» *Linguistic Inquiry* 29(2): 338–345. URL: <http://www.jstor.org/stable/4179022>.

Washio, Ryuichi (1997): «Resultatives, compositionality and language variation.» *Journal of East Asian Linguistics* 6(1): 1–49. URL: <http://www.ingentaconnect.com/content/klu/jeal/1997/00000006/00000001/00119308>.

Imola-Ágnes Farkas
Babeş-Bolyai University
Faculty of Letters
400202, Cluj-Napoca
Romania

© Romania Minor
http://www.romaniaminor.net/ianua/

BDD-A5290 © 2011 Romania Minor
Provided by Diacronia.ro for IP 216.73.217.31 (2026-11-26 16:59:44 UTC)