IS EXPLETIVE NEGATION TO BE FOUND IN MOLDOVAN DACO-ROMANIAN NON-SPECIFIC FREE RELATIVES AND UNCONDITIONALS?

ŞTEFANIA COSTEA

"Iorgu Iordan – Al. Rosetti" Institute of Linguistics,
Romanian Academy / University of Cambridge
stefania.costea@ymail.com

Cuvinte-cheie: *relative libere nonspecifice*, *incondiţionale*, *negaţie*, *româna vorbită în Republica Moldova.*

Key-words: *non-specific free relatives*, *unconditionals*, *negation*, *Moldovan Daco-Romanian.*

1. INTRODUCTION

The present paper focuses on the investigation of the role played by the negative marker *nu* in affirmative non-specific free relatives and constituent unconditionals found in Moldovan Daco-Romanian. These constructions, exemplified in (1) and (2) below, seem to parallel structures from Russian, but contrast with those from standard Daco-Romanian, as it will be shown.

(1) *Dar, în ziua de azi, oriunde **nu** te-*
but today wherever NEG CL.ACC.2SG
ai întoarce, e lokhotron.
AUX.COND.2SG turn is fraud
'But today, wherever you go, there are frauds.'
(Moldovan Daco-Romanian, f., 03.02.2018)

(2) *Cum ăsta **m**-aş întoarce, tot de postul dau.*
however this NEG=AUX.COND.1SG turn still of post see
'Whatever I do, I see this post again.'
(Moldovan Daco-Romanian, f., 03.02.2018)

1.1. Moldovan Daco-Romanian is the variety of Daco-Romanian spoken in the Republic of Moldova, which has been under an intense linguistic contact with Russian for 200 years.

The data used for the analysis put forward in this paper are extracted from different corpora (e.g. spontaneous conversations between native MDR speakers on

SCL, LXXI, 2020, nr. 1, Bucureşti, p. 116–126

BDD-A31121 © 2020 Editura Academiei
Provided by Diacronia.ro for IP 216.73.217.31 (2026-11-27 06:04:49 UTC)

Facebook, marked with 'f.'), from the material recorded by the author during several fieldwork sessions held between 2017 and 2018 (examples marked with 'fw.'). When it was necessary, native Moldovan Daco-Romanian speakers were asked direct questions (examples marked with 'Q'). All the examples provided below were checked again against native speakers of MDR using a neutral intonation, in order to avoid misinterpretation.

1.2. As for the theoretical framework, the constructions analysed in this paper are non-specific free relatives (as in (3)) and constituent unconditionals (hereafter 'unconditionals', unless stated otherwise)/concessive conditionals (as in (4)).

(3) Usually, I greet ***whoever*** *comes to the party*.
(4) ***Whoever*** *comes to the party*, it will be fun.

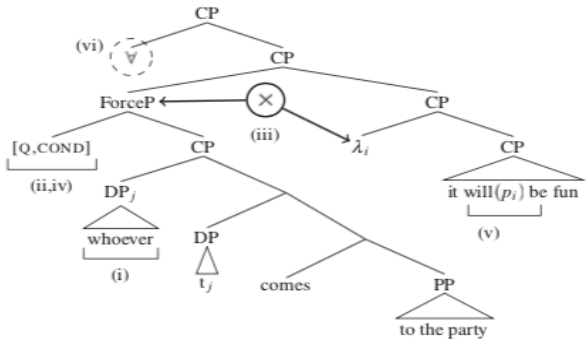

Fig. 1
(Rawlins 2013: 172)

Along the lines of Rawlins's (2013) analysis of unconditionals, we will consider the anatomy of an unconditional as follows: *wh* + '-ever' introduces alternatives into the composition (i); the question operator introduces exhaustiveness and mutual exclusivity presuppositions, while the conditional adjunct restricts the domain of a main clause modal (ii, iv); alternatives compose pointwise with the main clause (via Hamblin (1973) pointwise function application) (iii); the modal in the main clause imposes an existence presupposition or entailment on its domain, leading to a distribution effect (v); finally, a default Hamblin universal operator collects alternatives (vi) (for a schematic representation, see Fig. 1).

It is worthwhile to mention that compositional Hamblin semantics, briefly mentioned above, integrates alternatives into ordinary composition using the pointwise application rule; that is to say, denotations represent sets that are subsets of some domain in the type hierarchy; composition happens via function application, but instead of a single function and a single argument, we combine sets of functions and arguments (Hamblin 1958; 1973; for a brief overview of the matter, see Rawlins 2013: 117–118).

BDD-A31121 © 2020 Editura Academiei
Provided by Diacronia.ro for IP 216.73.217.31 (2026-11-27 06:04:49 UTC)

On purely formal grounds, most unconditionals could be derived from non-specific free relatives, which makes the above analysis also helpful for describing non-specific free relatives. Nevertheless, one crucial difference between the two constructions is that only the latter is a constituent of the containing clause and may fill a functional slot within that clause (Haspelmath & König 1998: 577; 606).

2. THE VIEW FROM STANDARD DACO-ROMANIAN AND RUSSIAN

2.1. In standard Daco-Romanian, unconditionals are typically marked by a complex *wh*-element, made up of a *wh*-item and a free choice component (i.e., *ori* < lat. **volet* 'want') (5) (Haspelmath & König 1998: 604; 614). This assumption is also true for non-specific free relatives (6).

(5) ***Orice*** ***ai*** ***face,*** *nu* *poți* *să*
whatever AUX.COND.2SG do NEG can SĂ.SUBJ
îți *repari* *greșeala.*
CL.DAT.2SG fix mistake
'Whatever you do, you can't fix your mistake.'
(standard Daco-Romanian)

(6) *Merg* ***oriunde*** ***voi*** ***putea*** ***ajunge*** ***cu*** ***mașina.***
go wherever AUX.FUT.1SG can get by car
'I will go wherever I can get by car.'
(standard Daco-Romanian)

A key observation regards the fact that *ori-* (as shown above) and markers of headed unconditionals (e.g. *nu contează* 'it doesn't matter') are in complementary distribution, both introducing a presupposition of variation over the denotation of the free relatives/unconditionals across possible worlds (von Fintel 2000).

That is to say, the head of the latter (8) has the same role as *ori-* in the former (7) (Rawlins 2013: 163). However, in (dialectal) Romanian, speakers can combine these ways of expressing indifference or ignorance, obtaining an unconditional headed by a bare *wh*-item, which functions as an universal quantifier (9) (as in English; see Horn 2000, but cf. Rawlins 2013: 165).

(7) ***Oriunde*** ***te*** ***duci*** ***la*** ***spital,*** *tu*
wherever CL.ACC.2SG go to hospital you
trebuie *să* *dai* *bani* *asistentelor.*
must SĂ.SUBJ give money to.nurses.the
'Wherever you go to the hospital, you must bribe the nurses.'
(standard Daco-Romanian)

BDD-A31121 © 2020 Editura Academiei
Provided by Diacronia.ro for IP 216.73.217.31 (2026-11-27 06:04:49 UTC)

(8) ***Nu*** ***contează*** ***unde*** ***te*** ***duci*** ***la*** ***spital***,
it.does.not.matter where CL.ACC.2SG go to hospital
tu *trebuie* *să* *dai* *bani* *asistentelor.*
you must SĂ.SUBJ give money to.nurses.the
'Wherever you go to the hospital, you must bribe the nurses.'
(standard Daco-Romanian)

(9) ***Unde*** ***te*** ***duci*** ***la*** ***spital***, *tu*
wherever CL.ACC.2SG go to hospital you
trebuie *să* *dai* *bani* *asistentelor.*
must SĂ.SUBJ give money to.nurses.the
'Wherever you go to the hospital, you must bribe the nurses.'
(standard Daco-Romanian)

Nevertheless, utterances resembling (9) can be ambiguous between a specific reading, i.e. you are going to a specific hospital, where you need to bribe the nurses, and a non-specific reading, i.e. at any hospital you intend to go, you will be required to bribe the nurses.

As can be seen in (7) and (9) above, the structure containing the *wh*-element (and, eventually, the particle *ori*-) is always clause-initial, as in the Standard Average European languages (Haspelmath & König 1998: 609). This placement can be explained using Cable's (2007; 2010) formal approach to questions: the WhP (representing the set of alternative propositions, one for each individual in the domain) first merges with a Q(uestion)-particle, projecting the QP (with this kind of [Q] operator scoping over the *wh*-item); the C head probes for an interpretable instance of Q-feature borne by the Q-particle; the first node in the c-command domain of C bearing this feature is the QP, and therefore it must Agree with this QP; this Agreement triggers Movement of the QP to C. The obtained effect is that an exhaustive and mutually exclusive set of domain restrictions is provided (similarly with the situation found in questions) (Rawlins 2013: 154–155; see also Hamblin 1958; 1973);

It is quite important to mention that in standard Daco-Romanian unconditionals/ non-specific free relatives negation cannot cooccur with the universal quantifier, nor with the head *nu contează* 'it doesn't matter' (10). A possible explanation can be that both the *wh*-element (with or without *ori*-) and the head of unconditionals quantify over exhaustive domains; however, negation on the verb would make the domains limitless (the discussion can be nuanced, given that *oricine* 'whoever' can co-occur with negation; this question will be left open for the moment);

(10) ****(Ori)unde/Nu contează unde*** ***nu*** ***te*** ***duci*** ***la***
wherever/it.does.not.matter.where NEG CL.ACC.2SG go to
spital, *tu* *trebuie* *să* *dai* *bani* *asistentelor.*
hospital you must SĂ.SUBJ give money to.nurses.the
'Wherever you don't go to the hospital, you must bribe the nurses.

BDD-A31121 © 2020 Editura Academiei
Provided by Diacronia.ro for IP 216.73.217.31 (2026-11-27 06:04:49 UTC)

2.2. In Russian, unconditionals and non-specific free relatives are signalled by a negated main verb, among other things (11) (Haspelmath & König 1998: 615).

(11) ***Gde*** ***by*** ***ja*** ***ni*** ***byla***, *vezde* *menja*
where SUBJ I NEG be everywhere me
vstrečali *druželjubno.*
meet.PST friendly
'Wherever I were, everywhere people met me in a friendly way.'
(Russian, *apud* Haspelmath & König 1998: 616)

It has been argued that the subjunctive particle *by*, rather than the negative marker is the equivalent of Romanian *ori-* (Citko 2003). That unconditionals are marginally possible without the subjunctive mood (which apparently contradicts this observation) was explained through the fact that verbal tenses found in these contexts (the future tense and the imperative mood) resemble the subjunctive in that they also introduce alternatives to the actual world (Citko 2003: 52, fn. 13).

Another question which arises is whether the negation found in this kind of utterances is pleonastic. For a negation to be 'pleonastic', a lexical licensor is needed; standard licensors are negative verbs, i.e. verbs with some negative meaning component, as *deny*, *forbid*, *doubt*, etc., preceded by *kak by* or *štoby* (Brown & Franks 1995: 261; Citko 2003: 48; Abels 2005: 61–63, among others). The subjunctive which follows these verbs (see, for example, (12) below) seems to carry a positive evaluation in Russian, while the negation has the role to negate the positive evaluation implied by the subjunctive (which is otherwise incompatible with a negative verb), rather than the predicate (Abels 2005: 62–63). Structurally, in this case, negation appears to consist of a NegP with an either empty or vacuous specifier position, i.e. the head position is filled with *ne*/*ni*, which is merely a morphosyntactic marker of a NegP, but there is no negative operator, the bearer of semantics, in the specifier position (Brown & Franks 1995: 262; 279; 281)

(12) *Ja* *bojus,* ***kak*** ***by*** ***kto-nibud*** ***ne*** ***prišel.***
I fear how SUBJ who-any NEG came
'I'm afraid someone will come.'
(Russian, *apud* Brown & Franks 1995: 262)

In unconditionals/non-specific free relatives, however, there is no plausible lexical licensor for 'pleonastic' negation (Citko 2003: 48). It is more likely to consider that the negation emphasises (the negative implicature) that the proposition is false (Citko 2003: 52–53), i.e. there are no worlds in which I were somewhere and people would not meet me in a friendly way (for (11) above).

BDD-A31121 © 2020 Editura Academiei
Provided by Diacronia.ro for IP 216.73.217.31 (2026-11-27 06:04:49 UTC)

3. THE VIEW FROM MOLDOVAN DACO-ROMANIAN

In Moldovan Daco-Romanian, unconditionals/non-specific free relatives with an apparent 'pleonastic' negation (13) coexist with the ones typical of standard Daco-Romanian (14), the latter being rarer. Although a proper statistical analysis is required, it seems that the tendency in use is to combine bare *wh*-elements with 'pleonastic' negation more often than *wh*-elements preceded by *ori*.

(13) ***Orice*** ***nu*** ***ai*** ***face*** ***la*** ***Ambasada***
whatever NEG AUX.COND.2SG do at embassy
României *durează* *mult.*
Romania take a.long.time
'Whatever you do at the Romanian Embassy takes a long time.'
(Moldovan Daco-Romanian, Q., 15.05.2018)

(14) ***Oricum*** ***ai*** ***rezolva*** ***problema,*** *e* *bine.*
however AUX.COND.2SG solve problem.the is fine
'However you solve the problem, it's fine.'
(Moldovan Daco-Romanian, fw., Soroca, 01.04.2018)

Negation in Moldovan Daco-Romanian free relatives and unconditionals is not constrained to appear only with the conditional (cf. Russian). Utterances with the past tense (15) or the future tense (16), although rarer, are considered fully grammatical by native speakers.

(15) *Am* *fost* *atentă* *cu* ***oricine*** ***nu***
AUX.PERF.1SG be careful with whoever NEG
a ***venit*** ***azi*** ***la*** ***mine*** ***în*** ***birou***.
AUX.PERF.3SG come today at me in office
'I was nice with anyone who has come today in my office.'
(Moldovan Daco-Romanian, fw., Chişinău, 30.03.2018)

(16) ***Cum*** ***n-a*** ***să*** ***te***
however NEG=AUX.PERF.2SG SĂ.CONJ CL.ACC.2SG
îmbraci*, ea* *va* *comenta.*
dress she AUX.FUT.3SG talk.badly
'However you get dressed, she doesn't like it.'
(Moldovan Daco-Romanian, Q., 04.05.2018)

Headed unconditionals are also present in Moldovan Daco-Romanian, the vast majority having the verb of the embedded clause in the affirmative form (17). It is worthwhile to mention that utterances with a negated verb are seen as ungrammatical when the verb is not in the conditional (18), and almost ungrammatical when it is a conditional (19).

(17) ***Nu*** ***contează*** *unde* *te* *duci,* *te*

BDD-A31121 © 2020 Editura Academiei
Provided by Diacronia.ro for IP 216.73.217.31 (2026-11-27 06:04:49 UTC)

NEG matter where CL.ACC.2SG go CL.ACC.2SG
vei descurca.
AUX.FUT.2SG do.well
'It doesn't matter where you go, you will be fine.'
(Moldovan Daco-Romanian, Q, 02.05.2018)

(18) ***Nu contează unde nu te duci,***
NEG matter where NEG CL.ACC.2SG go
te vei descurca.
CL.ACC.2SG AUX.FUT.2SG do.well
'It doesn't matter where you go, you will be fine.'
(Moldovan Daco-Romanian, Q, 02.05.2018)

(19) ?/***Nu contează unde nu te-ai***
NEG matter where NEG CL.ACC.2G=AUX.COND.2SG
duce, *te vei descurca.*
go CL.ACC.2SG AUX.FUT.2SG do.well
'It doesn't matter where you might go, you will be fine.'
(Moldovan Daco-Romanian, Q, 02.05.2018)

However, when this type of 'negation' is stressed, it becomes a typical negation (20).

(20) ***Ce n-ai face, ce***
whatever NEG=AUX.COND.2SG do whatever
n-ai realiza sau NU ai
NEG=AUX.COND.2SG succeed or NEG AUX.COND.2SG
realiza, *mami este alături de tine.*
succeed mommy is near you
'Whatever you might do, in whatever you might succeed or you might not succeed, mommy is near you.'
(Moldovan Daco-Romanian, fw., Chişinău, 30.03.2018)

Finally, it should be noted that the two values of *nu* cannot co-occur in the same utterance (21).

(21) ***Ce nu nu ai realiza,*** *mami*
whatever NEG NEG AUX.COND.2SG succeed mommy
e lângă tine.
is near you
'In whatever you might not succeed, mommy is near you.'

BDD-A31121 © 2020 Editura Academiei
Provided by Diacronia.ro for IP 216.73.217.31 (2026-11-27 06:04:49 UTC)

4. THE ANALYSIS

4.1. The fact that the type of negation which is analysed is used frequently with universal quantifiers (with or without *ori-*), but occurs only marginally in headed unconditionals suggests that, whatever the value of *nu* would be, it must have a local trigger, in the same clause.

It is possible that the key-contexts that favoured the appearance of another function of *nu* are the ones in which universal quantifiers have a bare *wh*-form, supporting both a specific interpretation and a non-specific interpretation (see, for this issue, example (9) above). Given the tendency of European languages to mark the unconditionals and non-specific free relatives with a particle or a suffix that immediately follows or precedes the WhP (Haspelmath & König 1998: 609–613), the speakers of Moldovan Daco-Romanian might have misanalysed the parallel utterances in Russian, wrongly attributing the role of introducing alternatives to the negator (a situation also found in Hebrew; see Eilam 2008 and the discussion below, in 4.2.); this, in turn, led to an LF overmarking of alternatives, i.e. through universal quantifiers and *nu*.

Afterwards, the common semantics of bare *wh*-forms of universal quantifiers and forms containing *ori-* could make it possible to have structures where the process of introducing alternatives is overmarked at PF, i.e. *ori-* forms co-occur with *nu*.

As it was shown above, NegP can have either a negative operator (hereafter, NO) as a specifier, which holds the negative semantics, and the negative marker as the head, or an empty or vacuous specifier position, which cannot contribute any negative semantics, and the negative marker as the head (Brown & Franks 1995: 262; 279; 281); bearing this in mind, it can be assumed that in Moldovan Daco-Romanian, there are circumstances in which the empty [Spec; NegP] can be filled with other operator(s), e.g. with one introducing alternatives into the composition (hereafter, AO).

Putting this hypothesis in the framework of Cable (2007; 2010) and Rawlins (2013), we can consider that in Moldovan Daco-Romanian the WhP (representing the set of alternative propositions) merges with a Q(uestion)-particle (that scopes over the WhP, introducing exhaustiveness and mutual exhaustivity presuppositions), projecting the QP; the C head probes for an interpretable instance of Q-feature borne by the Q-particle; the first node which C encounters bearing this feature is the QP, and therefore it must Agree with this QP; this Agreement triggers Movement of the QP to C; formally, this can be similar to the tree presented in section 1.2 (i.e., the left branch, where the question operator, and the *wh* + 'ever' elements, etc. are to be found); what changes is that, in this branch, alternatives are doubly marked: by the universal quantifier and by an AO, found in [Spec; NegP]; it is expected that the AO is inserted in [Spec; NegP] because NegP is the closest projection to C (Cinque 1999; Ledgeway 2012; 2014), where the universal quantifier is, thus their semantics can interfere.

BDD-A31121 © 2020 Editura Academiei
Provided by Diacronia.ro for IP 216.73.217.31 (2026-11-27 06:04:49 UTC)

Moldovan Daco-Romanian would have, following this hypothesis, two kinds of *nu* (which cannot be found in the same contexts, suggesting that they might share the same position): one which is the head of a NegP with a NO in its specifier position, bearing the semantics of a proper negation, and another that is the head of a NegP with an AO (required by the presence of a universal quantifier in C domain) in its specifier position, introducing alternatives into the composition.

4.2. Haspelmath & König (1998: 633) proposed the map presented in Fig. 2 in which languages are grouped by the way they mark unconditionals/non-specific free relatives; of course, given the present paper, we will add Moldovan Daco-Romanian in the category of Russian and Polish.

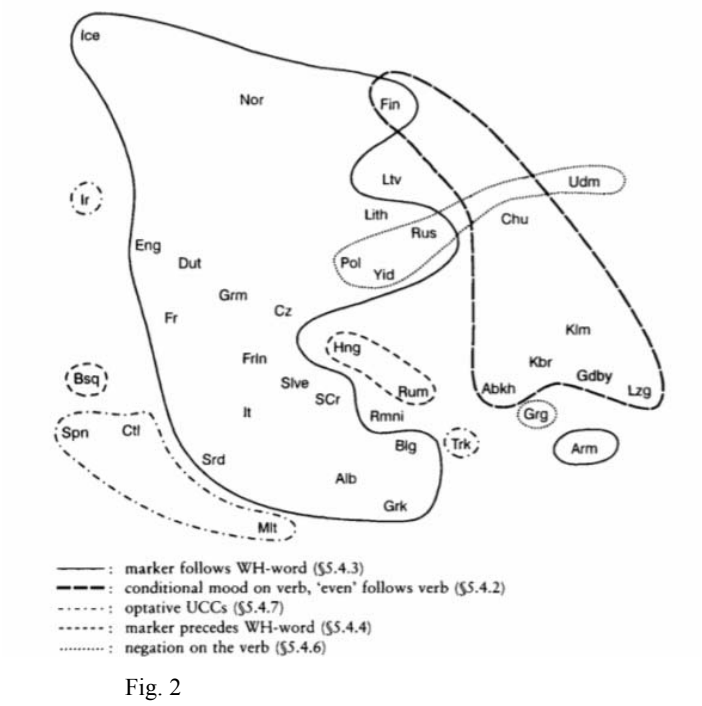

Fig. 2

In the same group of languages is also Hebrew, in which the existence of this pattern can be attributed to Slavic (direct or indirect, through Yiddish) influence (Haspelmath & König 1998: 616; Eilam 2008: 24; see also Blanc 1956; 1965). What makes the case of Hebrew interesting for the purposes of the present paper is that it is a non-Slavic language (as Moldovan Daco-Romanian) which borrows this means of marking unconditionals/free relatives; this means that the non-Slavic languages native speakers could have reanalysed the original Slavic forms, attributing new interpretations to them. For example, in Hebrew, the negative marker *lo* surfaces in utterances (e.g. unconditionals/non-specific free relatives

BDD-A31121 © 2020 Editura Academiei
Provided by Diacronia.ro for IP 216.73.217.31 (2026-11-27 06:04:49 UTC)

(22)) where it does not seem to contribute negative force to the sentence, as in Moldovan Daco-Romanian (Eilam 2008: 2–3), and *lo* with the 'ever' reading cannot take stress in Hebrew, unlike standard negation (Eilam 2008: 4) (a situation which can also be found in Moldovan Daco-Romanian) (see Eilam 2008 for an extensive discussion regarding the Hebrew marker *lo*).

(22) *ma* *še-dani* ***lo*** *katav* *hitparsem*
what that-Danny NEG wrote was.published
ba-iton.
in.the-newspaper
'Whatever Danny wrote was published in the newspaper.'
(Hebrew, *apud* Eilam 2008: 3)

It is more important to say that in the case of Hebrew, as well as in the case of Moldovan Daco-Romanian, these new developments – or the new ways of analysing these developments – do not refute Citko's (2003) proposal, whereby the 'ever' component in Russian and Polish is contributed by the subjunctive mood, not by the expletive negation (Eilam 2008: 24); these would only apply to non-Slavic languages.

The conclusion reached by Eilam (2008: 15; 24) for Hebrew resembles the one we have proposed above for MDR: in Hebrew, *lo* can serve both as a standard negative marker and, in non-specific free relatives and unconditionals, as a marker equivalent to the 'ever' morpheme in English.

5. GENERAL CONCLUSIONS

In MDR, there are two kinds of *nu*, one that bears the semantics of a proper negation, and another that has the role of introducing alternatives into the composition.

The existence of a second type of *nu* – atypical of standard Daco-Romanian, but specific for unconditionals and non-specific free relatives in Moldovan Daco-Romanian – appears to be the result of the reanalysis of a Russian construction made by native speakers of Moldovan Daco-Romanian (who are bilinguals, speaking both Romanian and Russian), i.e. they attribute the alternative-introducing role (played by the subjunctive mood in Russian) to the negation.

This hypothesis finds further support in the behaviour of Hebrew (which has also been influenced by the Slavic languages, by Russian in particular), which shows similar uses of the negative marker; thus, languages from other families may undertake the path of reanalysis documented in MDR.

It is possible that the key-contexts that favoured the appearance of another function of *nu* are those in which universal quantifiers have a bare *wh*-form, supporting both a specific interpretation and a non-specific interpretation; in this context, negation marks a non-specific reading of the utterance.

BDD-A31121 © 2020 Editura Academiei
Provided by Diacronia.ro for IP 216.73.217.31 (2026-11-27 06:04:49 UTC)

SOURCES

Facebook
Spontaneous speech – Chișinău, Soroca, 2018

BIBLIOGRAPHY

Abels, K., 2005, "'Expletive negation' in Russian: A conspiracy theory", *Journal of Slavic Linguistics*, 13, 1, p. 5–74.
Blanc, H., 1956, "Review of *Ha-ivrit šelanu, dmuta be-or sitot ha-balsanut* ['Our Hebrew, as seen by the methods of linguistics'] by Haiim Rosen", *Language*, 32, p. 794–802.
Blanc, H., 1965, "Some Yiddish influences in Israeli Hebrew", in U. Weinreich (ed.), *The Field of Yiddish: Studies in Language, Folklore, and Literature. Second Collection*, The Hague, Mouton de Gruyter, p. 185–201.
Brown, S., S. Franks, 1995, „Asymmetries in the Scope of Russian Negation", *Journal of Slavic Linguistics*, 3, 2, p. 239-287.
Cable, S., 2007, *The Grammar of Q: Q-particles and the Nature of Wh- fronting, as revealed by the Wh-questions of Tlingit*, PhD Thesis, MIT.
Cable, S., 2010, *The Grammar of Q: Q-particles, Wh-movement, and Pied-Piping*, Oxford, Oxford University Press.
Citko, B., 2003, "On the syntax and semantics of English and Polish concessive conditionals", *Journal of Slavic Linguistics*, 11, 1, p. 37–54.
Eilam, A., 2008, "The crosslinguistic realization of *-ever*: Evidence from Modern Hebrew". Semantics Qualifying Paper, Manuscript. http://www.ling.upenn.edu/~eilamavi/ExplNeginHeb-final.pdf.
Hamblin, C.L., 1958, "Questions", *Australasian Journal of Philosophy*, 36, p. 159–168.
Hamblin, C.L., 1973, „Questions in Montague English", *Foundations of Language*, 10, p. 41–53.
Haspelmath, M., E. König, 1998, "Concessive conditionals in the languages of Europe", in J. van der Auwera (ed.), *Adverbial Constructions in the Languages of Europe*, Berlin, Mouton de Gruyter, p. 563–640.
Horn, L.R., 1978, "Some aspects of negation", in J.H. Greenberg, C.A. Ferguson, E.A. Moravcsik (eds), *Universals of Human Language*. *Vol. 4: Syntax*, Stanford, Stanford University Press, p. 127–210.
Ledgeway, A., 2012, *From Latin to Romance: Morphosyntactic Typology and Change*, Oxford, Oxford University Press.
Ledgeway, A., 2014, "Romance Auxiliary Selection in Light of Romanian Evidence", in G. Pană Dindelegan, R. Zafiu, A. Dragomirescu, I. Nicula, A. Nicolae, L. Esher (eds), *Diachronic Variation in Romanian*, Newcastle upon Tyne, Cambridge Scholars Publishing, p. 3–35.
Rawlins, K., 2013, "(Un)conditionals", *Natural Language Semantics*, 21, 2, p. 111–178.
von Fintel, K., 2000, "Whatever", in B. Jackson, T. Matthews (eds), *Proceedings of SALT X*, Cornell University, Ithaca, NY, CLC Publications, p. 27–40.

EXISTĂ NEGAȚIE EXPLETIVĂ ÎN RELATIVELE LIBERE NONSPECIFICE ȘI ÎN INCONDIȚIONALELE DIN ROMÂNA VORBITĂ ÎN REPUBLICA MOLDOVA?

Rezumat

În lucrarea de față sunt analizate relativele libere nonspecifice și incondiționalele din limba română vorbită în Republica Moldova, accentul fiind pus asupra utilizării mărcii de negație *nu* fără sens negativ, specifică acestor contexte. Cu toate că, aparent, aceasta din urmă nu prezintă nicio încărcătură semantică, o abordare comparativă cu limba rusă și cu limba ebraică dovedește faptul că rolul pe care îl îndeplinește este similar cu cel jucat de particula *ori-*, utilizată în formarea unor constituenți precum *oriunde*, *oricum* etc.

BDD-A31121 © 2020 Editura Academiei
Provided by Diacronia.ro for IP 216.73.217.31 (2026-11-27 06:04:49 UTC)